www.WorkshopManuals.co.uk

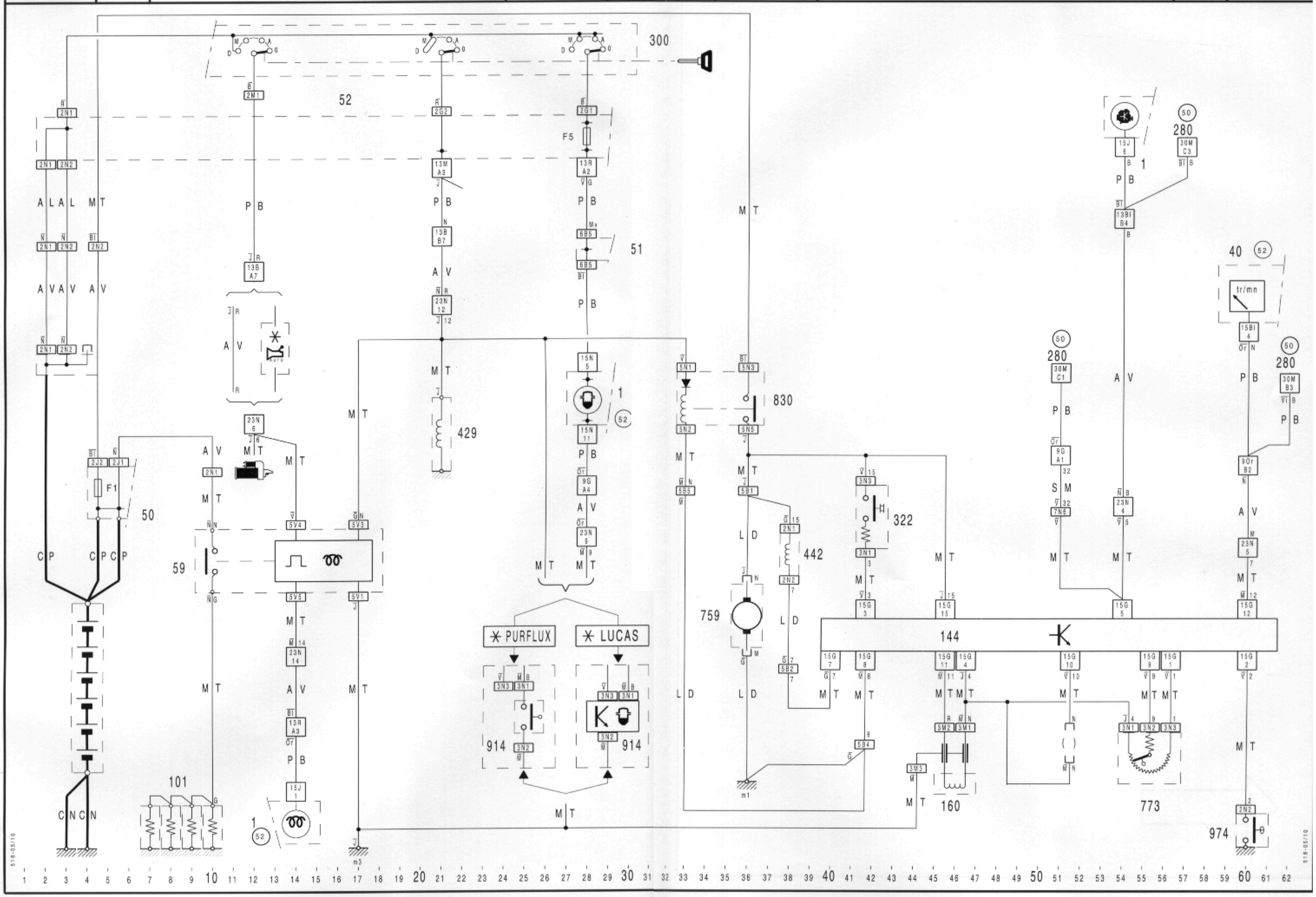

www.WorkshopManuals.co.uk
www.WorkshopManuals.co.uk

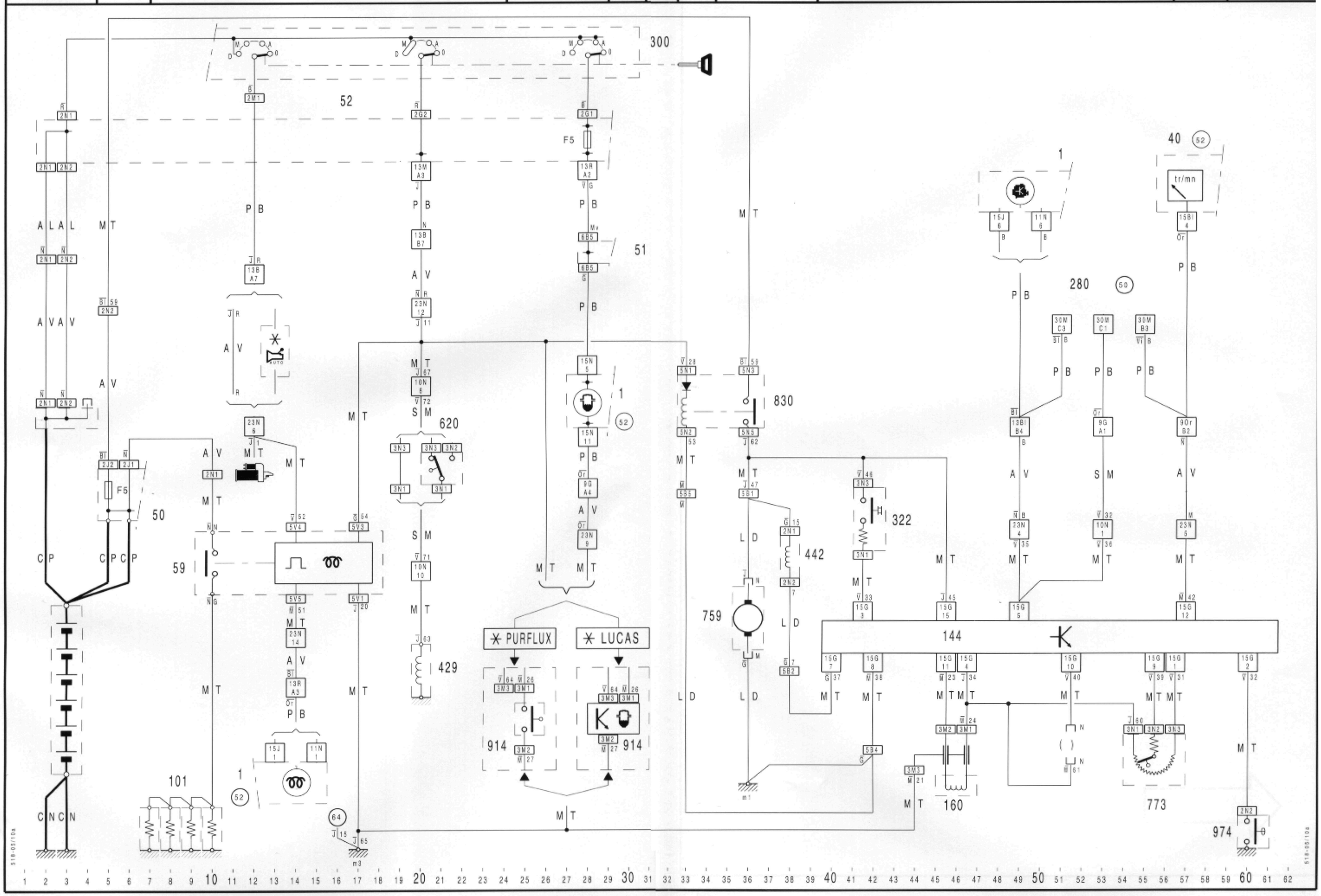

www.WorkshopManuals.co.uk

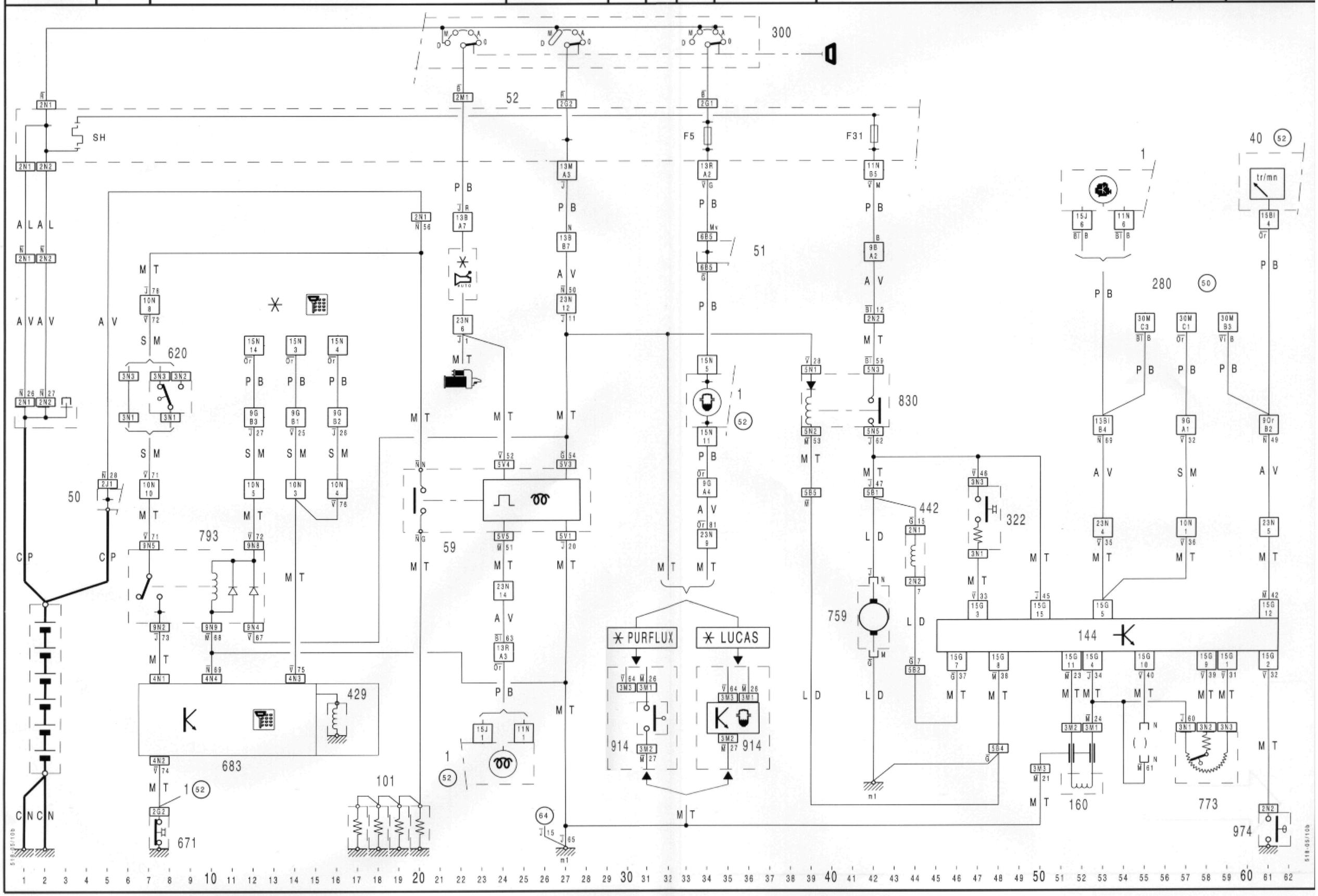

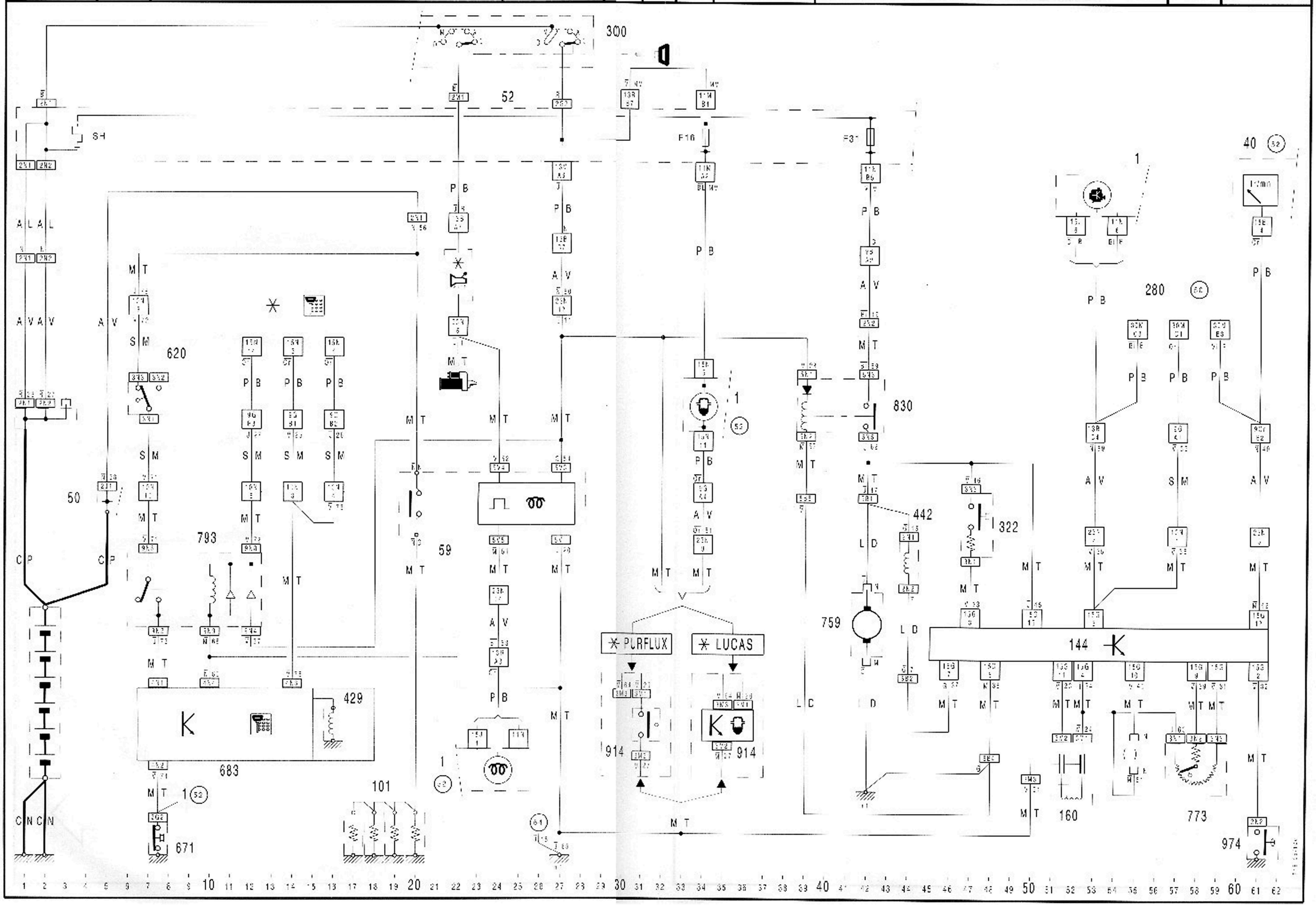
300
52
SH
F16
F31
40
1
280
50
620
793
59
830
442
322
759
144
429
683
671
101
914
914
PURFLUX
LUCAS
160
773
974